C.I.P.	30 BR Country of Origin: US	TAB. I Date 11-05-25 Revision

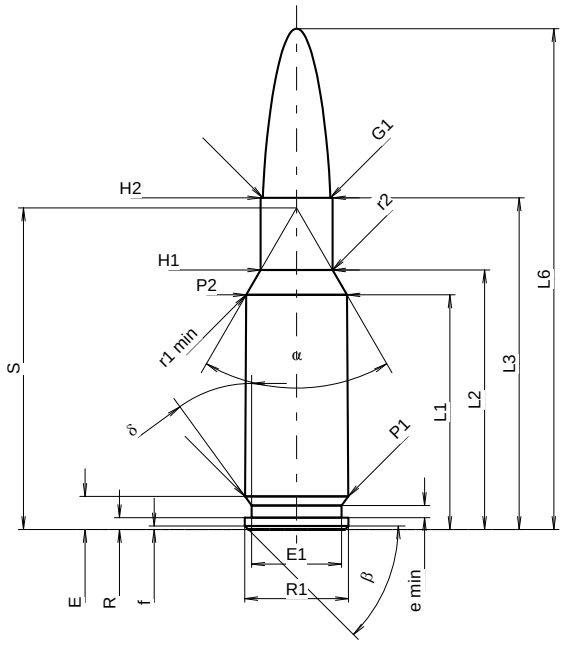

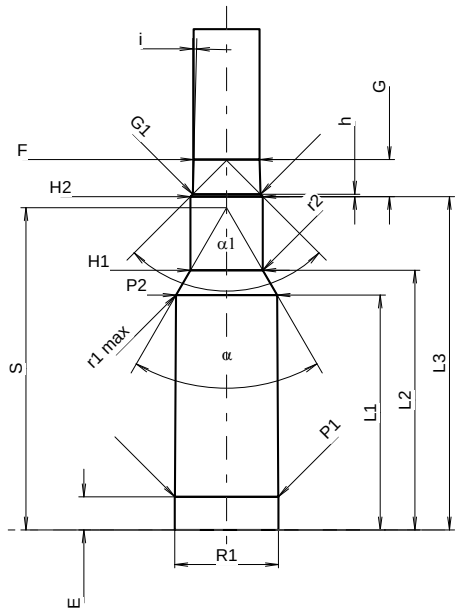

Scale 1.14:1

CARTRIDGE MAXI

Lengths

L1 1)	=	27.17	-0.20
L2 1)	=	30.05	-0.20
L3 1)	=	38.41	
L4	=		
L5	=		
L6	=	58.00	

Case Head

R	=	1.37
R1	=	12.01
R3	=	
E	=	3.83
E1	=	10.40
e min	=	1.40
δ	=	36°
f	=	0.40
β	=	45°

Powder Chamber

P1	=	11.94	
P2 1)*	=	11.66	-0.20

Junction Cone

α *	=	60°
S *	=	37.25
r1 min	=	0.64
r2	=	1.50

Collar

H1 *	=	8.33
H2 1)	=	8.33

Projectile

G1 1)	=	7.82
G2	=	
F	=	
L3+G 1)	=	42.69

Pressures (Energies)
Method Transducer

Pmax	=	4050	bar
PK	=	4658	bar
PE	=	5063	bar
M	=	17.50	
EE	=	3200	Joule

Miscellaneous Dimensions

Fe 1)3)	=	0.10
delta L	=	

CHAMBER MINI

Lengths

L1	=	27.20
L2	=	30.08
L3 1)	=	38.61

Breech

R	=	
R1	=	12.02
R2	=	
R3	=	
r	=	

Powder Chamber

E	=	3.83
P1 1)	=	11.99
P2 *	=	11.71

Junction Cone

α 1)*	=	60°
S *	=	37.33
r1 max	=	0.64
r2	=	1.90

Collar

H1 *	=	8.38
H2 1)	=	8.38

Commencement of Rifling

G1 1)*	=	7.83
G 1)	=	4.28
α1	=	90°
h	=	0.28
s	=	
i 1)*	=	1°30'
w	=	

Barrel

F 1)*	=	7.62
Z 1)	=	7.82

Grooves

b	=	2.50	
N	=	6	
u	=	431.80	
Q	=	47.13	mm²

Dimensions in << mm >>
Dimensions and Tolerances for Proof Barrels
see Appendix CR 1.

Notes:
1) Check for safety reasons
3) Headspace on Shoulder
* Basic dimensions